HAMILTON
SINKLER

HK004R
Revival Classic Door Knob
Roped

Finishes:
- *Antique Brass (AB)*
- *Bright Antique Brass (BAB)*
- *Brushed Nickel (BN)*
- *Burnished Antique Brass (BRAB)*
- *Burnished Brass (BRB)*
- *Burnished Nickel (BRN)*
- *Dull Black (DB)*
- *Oil Rubbed Bronze (ORB)*
- *Pewter (PW)*
- *Polished Black Nickel (BLN)*
- *Polished Brass with Lacquer (PB)*
- *Polished Chrome (PC)*
- *Polished Nickel (PN)*
- *Satin Brass (SB)*
- *Unlacquer Brass (UB)*

Base Material: Solid Brass

Knob shown with R305R Rosette

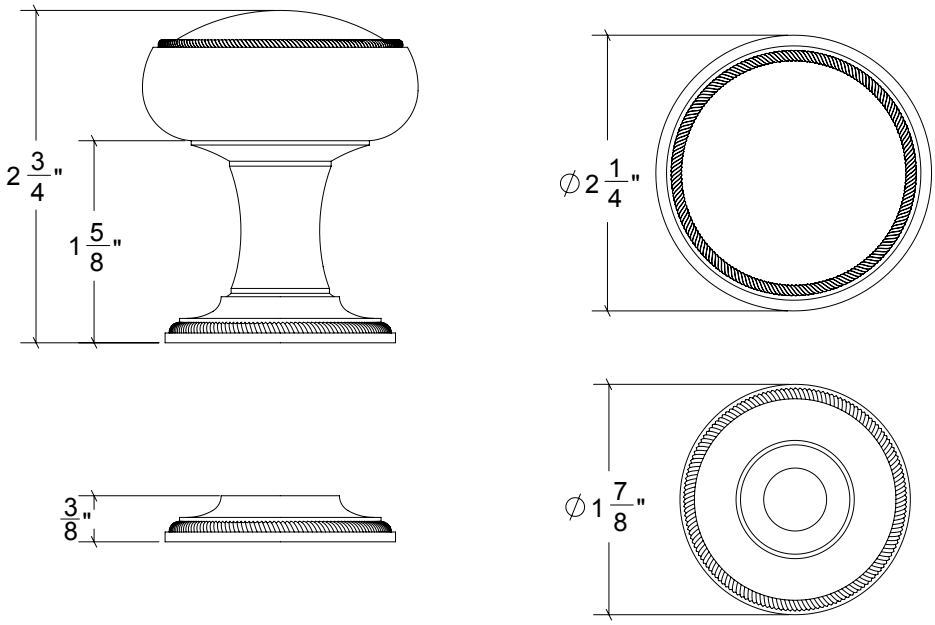

Tel: 212-760-3377 orders@hamiltonsinkler.com
Fax: 212-760-3362 www.hamiltonsinkler.com